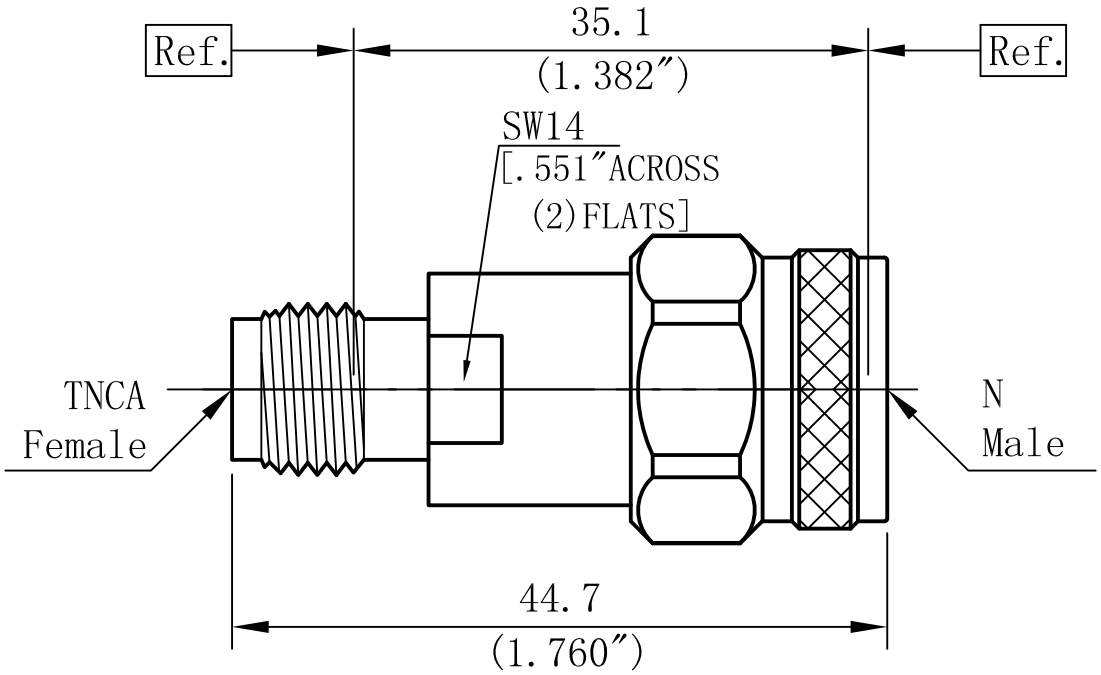

Performance Features:

Nominal Impedance: 50Ω
Frequency Range: DC-18GHz
VSWR: DC-18GHz... 1.25:1(Max)

Materials/Finishes:

Housing: SU303F
Polished & Passivated
Center Contact: Beryllium Copper
Gold Plated
Insulators: PEI

ALLWIN TECHNOLOGY
4th Floor, West Unit,
Incubation Building 1
Guanghua Lu, Nanjing
TEL:025-84304950
FAX:025-84304959
WWW.ALLWINTEK.COM

PROPRIETARY INFORMATION: THE INFORMATION WHIN THIS DRAWING IS PROPRIETARY AND SHALL NOT BE USED OR DISCLOSED WITHOUT PRIOR WRITTEN PERMISSION FROM ALLWIN TECHNOLOGY.

LTR	DESCRIPTION	DATE	APPR.

DIRECTION OF VIEW

UNIT: mm

DRAWN	Shaoqing Du
CHECKED	Haimin Zhang
APPR.	Gang Cao

UNLESS OTHERWISE SPECIFIDE
1. REMOVE ALL BURRS, BREAK ALL CORNERS, SHARP EDGES 0.05 R MAX
2. LINEARITY TOLERANCES ±0.1. ANGLE TOLERANCES ±1°
3. DIAMETERS ON COMMON CENTERS TO BE CONCENTRIC WITHIN 0.1
4. ALL DIMENSIONS ARE AFTER PLATING. SURFACE FINISHED

DO NOT SCALE DRAWING

TITLE
N-TNCA Adapter

DWG NO.
Z345410Z01

OUTLINE DRAWING

SIZE A4_h	SCALE 4:1	REV. V2.0	SHEET 1/1